MAXIMATOR® UK
Maximum Pressure.

Gas Booster Pressure Test Unit (GTU)
Hydrogen

Technical Data Sheet

Order Code: GTU-DLE75-1-GG-H2

Features

Maximator Air driven Gas Booster Model	DLE75-1-GG-H2
Air Drive Regulator / Pressure Gauge / Speed control valve	
Inlet Pressure Gauge 100mm Glycerine filled	
Outlet Pressure Gauge 100mm Glycerine filled	
High Pressure Outlet Isolation Valve	
Manual Pressure Release valve	
Robust Stainless Steel frame for ease of transportation and Protection	

Technical Data / System Scope

Max Outlet Pressure:		750 bar/ 10875 psi
Air drive pressure:		1-10 bar / 14,5—145 psi
Pressure ratio:		1:75
Compression ratio :		1:20
Displacement volume/stroke		25 cm3
Max Cycles		130 / min
Stall Pressure		PB = i * pL + pA
Connections	Inlet:	1/4" BSP
	Outlet:	1/4" BSP
	Air :	3/4" BSP
Air Pressure Gauge		0-11bar / 160psi
Pressure Gauge		0-1000bar / 14500psi 100mm glycerine filled
Max Temp		100°C

Construction

Frame	Stainless Steel	
Compressor Head	1.4305	
HP Cylinder	1.4542	
Piston	1.4305 (hardened)	
Valves Fittings & Tubing	316 ss	
Seal package:	Hydrogen Gas :	PTFE, Viton
Overall	900w x 500h x 500d mm	
Nett Weight	41kg	

Options

- Inlet / Outlet Hoses
- Outlet Pressure regulator
- Chart Recorder connection Point
- NPT connections
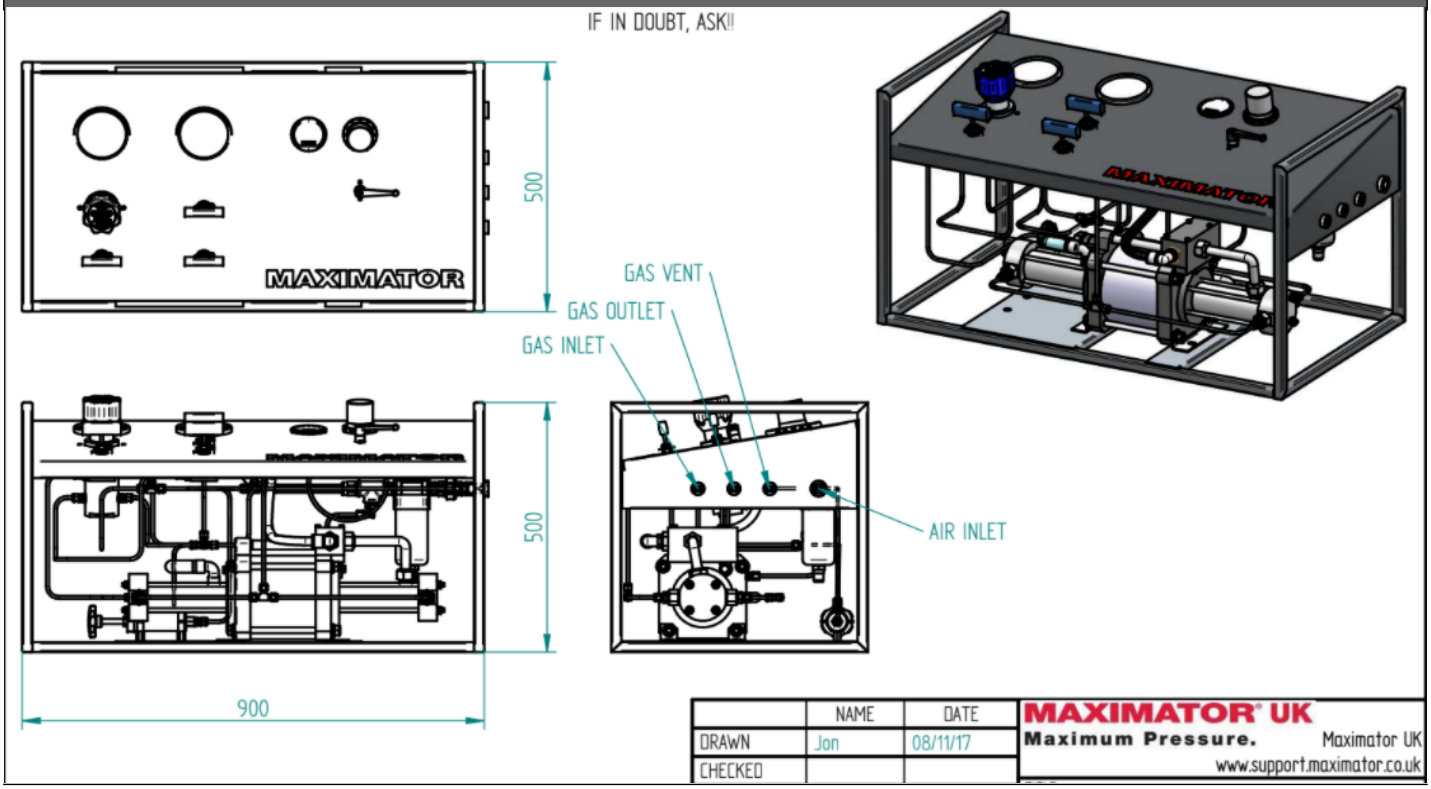
Dimensions